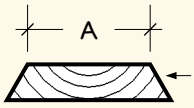

Side Profile

Wood's growth rings should face inward as shown

Entry to Floor Drop	
Side Height	D
8 1/2"	5"
9"	5 1/2"
9 1/2"	6"
10"	6 1/2"
10 1/2"	7"
11"	7 1/2"

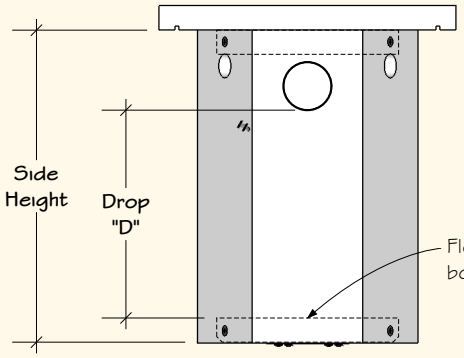

Front View

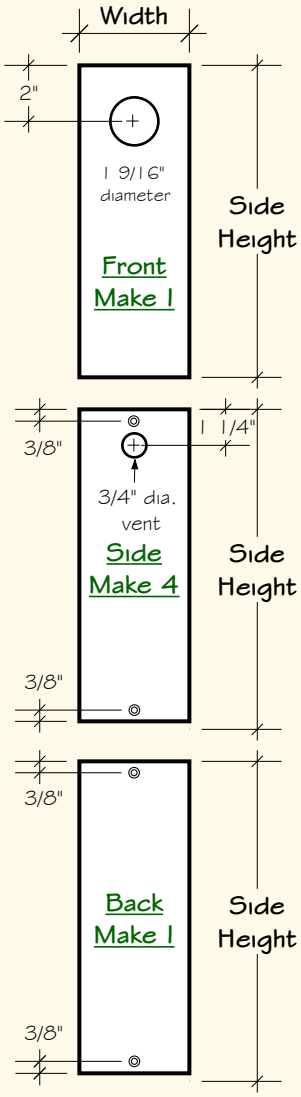

Side Width		
Sq. in.	A	Width
14.8	2 3/8"	3 1/4"
16.4	2 1/2"	3 3/8"
17.1	2 9/16"	3 7/16"
18	2 5/8"	3 1/2"
19.8	2 3/4"	3 5/8"
21.6	2 7/8"	3 3/4"
23.5*	3"	3 7/8"
25.5*	3 1/8"	4"

*Will accept standard Van Ert Sparrow Trap

Overall side width is based on 3/4" thick wood. Use the "A" dimension to maintain your target floor size if wood is more or less than 3/4" thick.

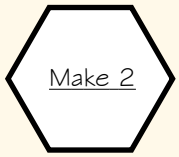

Floor & Inner Roof

Dry assemble box using band clamps or masking tape and trace for cutting pattern.

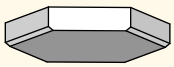

Sand a bevel on 5 bottom edges of the floor to create a drip edge. Leave front edge facing door square.

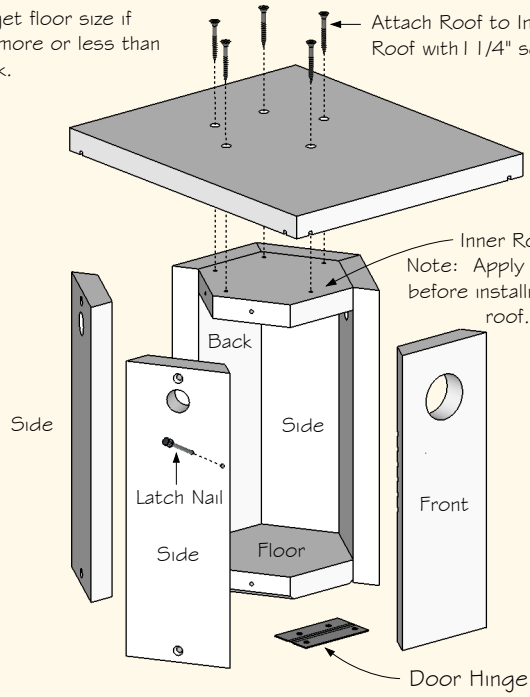

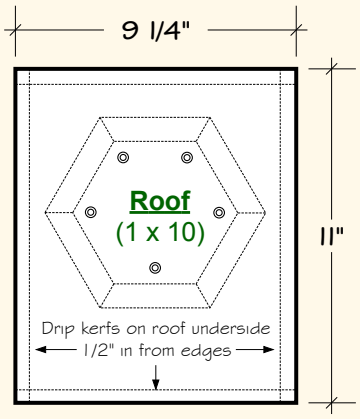

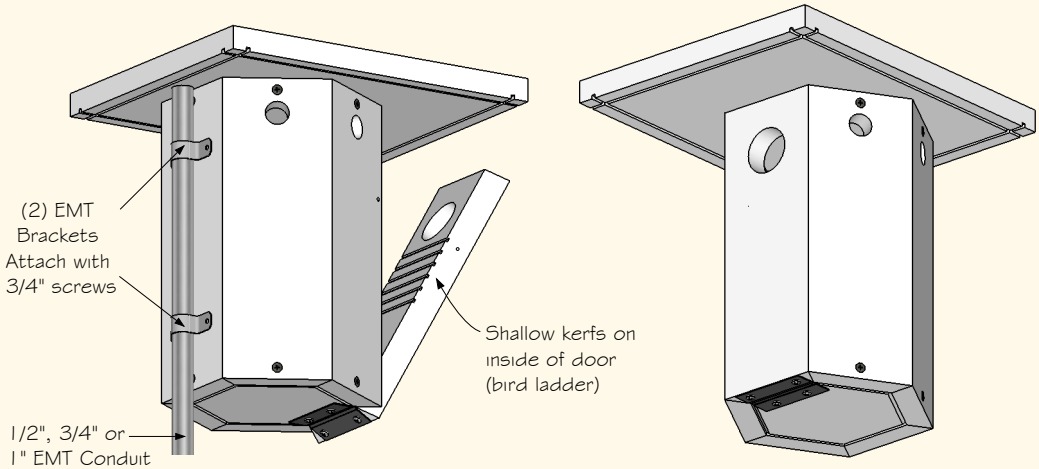

Suggested mounting

HEXAGON NESTBOX

Designed by: Fred Stille

Material: Sides for boxes with floors up to 17.1 sq. in. can be cut from 1 x 4 (3/4" x 3 1/2").
Boxes with floors 18 sq. in. and over require a 1 x 6 (3/4" x 5 1/2").
Floors and Inner Roof for all sizes require 1 x 6. Roof is 1 x 10 (3/4" x 9 1/4").

Drawn by: Fred Stille, Sr. V 1.0, January 2013 Page 1 of 1