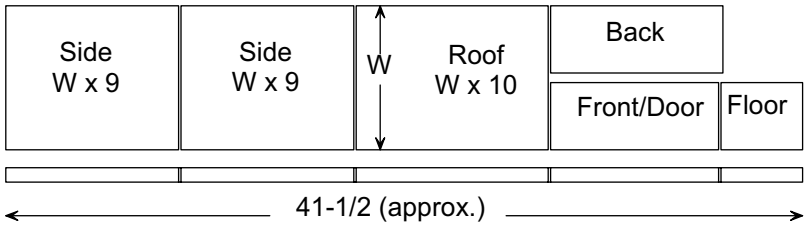

W = 7-1/4 to 7-1/2
Front = 3-1/2 x 8-3/4, Back = 3-1/2 x 9, Floor = 3-1/2 x 4-1/4

Stock needed: Nominal 1 x 8, 42" long
Note that Nominal 1 x 8 = 3/4 x 7-1/4 to 7-1/2

All holes are 1/8 except when shown otherwise

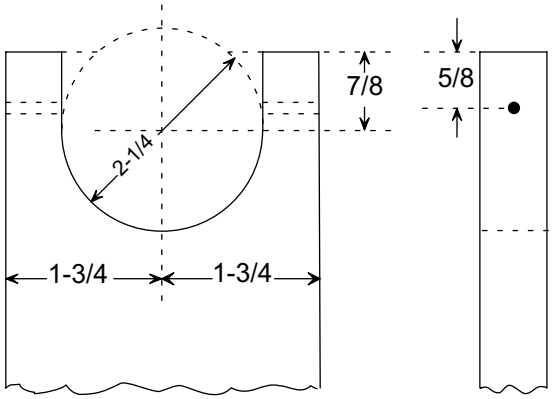

Front/Door

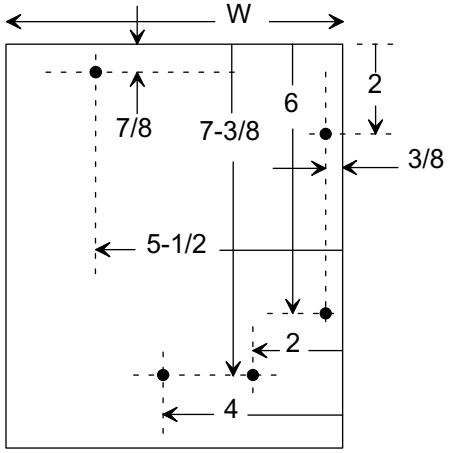

Sides (2)

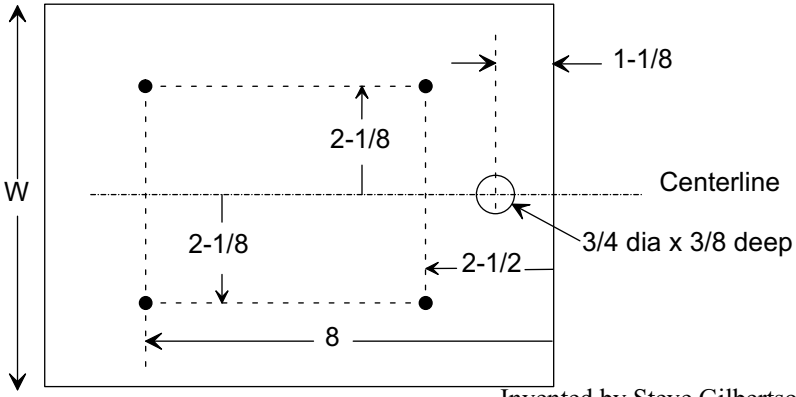

Roof

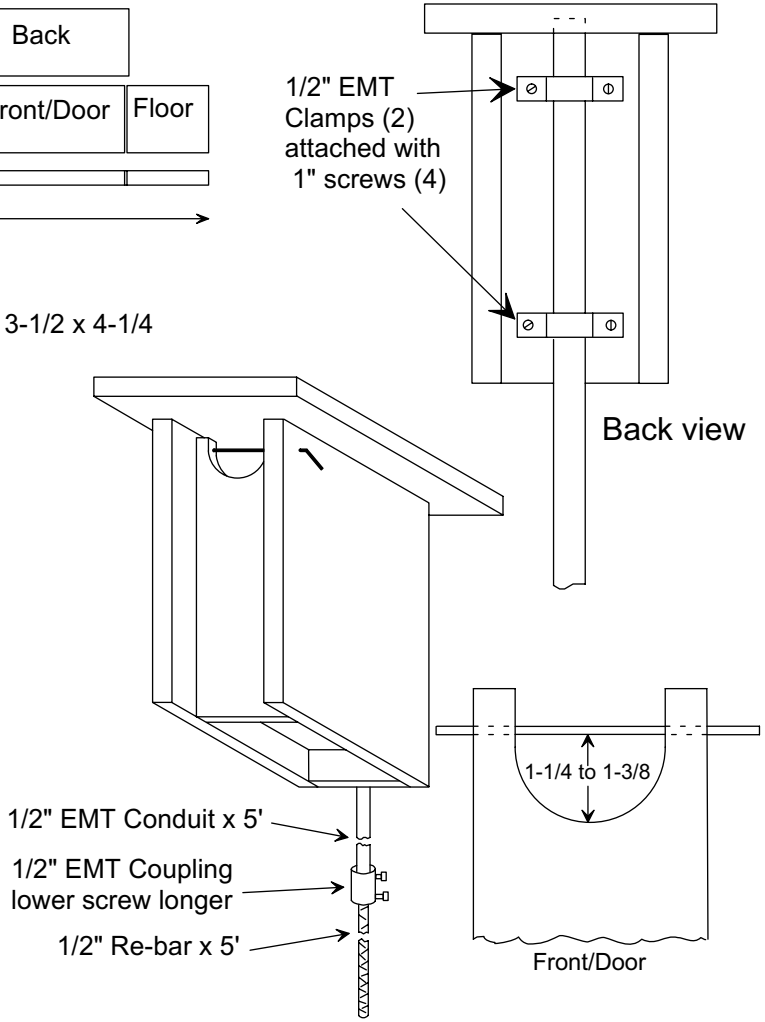

Rev. 5/9/00

Invented by Steve Gilbertson
Drawn by Fawzi Emad

ADVANTAGES OF A GILWOOD NEST BOX

- ♦ Easy sparrow trapping with Bauldry or Universal style trap. Fitted with 3/4"x3-1/4"x1/4" hardware cloth adapter for slot boxes.
- ♦ Only 1 or 2 lumber dimensions required, 1"x4" and 1"x8" (or 1"x8" may be ripped to 1"x4").
- ♦ Eggs or young are not inclined to fall out of box during monitoring.
- ♦ Light weight - at about 4 lbs. is easily and safely mounted on steel wooled and waxed 1/2" metal conduit which greatly reduces the problem of ants, squirrels, raccoons; and, more importantly, it reduces the chances of coming in contact with the Hanta virus through mice and their nests.
- ♦ Easy blowfly larvae removal. Reminder: plump, pupated larvae - those usually removed - have already fed to conclusion and are no further threat to nestlings.
- ♦ Dry, solid, long-lasting nest cavity is promoted by use of screws and construction adhesive.
- ♦ Easy door removal - replacement with similar or totally dissimilar entrance options hinged with screws at pre-drilled side locations.
- ♦ Door/entrance height can be adjusted from 1-1/4" to 1-3/8" by bending wire as shown on left.

NOTE: Side ventilation is recommended if entrance/ventilation area in square inches is reduced from 4 square inches as in Gilwood entrance style. Area in square inches of common openings is described below:

1-1/4 " round	=	1.22 square inches
1-3/8" round	=	1.50 square inches
1-1/2" round	=	1.75 square inches
1-9/16" round	=	1.91 square inches
1-5/8" round	=	2.10 square inches
1-3/4" round	=	2.40 square inches
2" round	=	3.14 square inches
2-1/4" round	=	4.00 square inches
1-1/4" x 2" oval	=	2.16 square inches
1-3/8" x 2-1/4" oval	=	3.00 square inches
4" round	=	12.56 square inches

Steve Gilbertson, Tel. 218-927-1953
HC 5, Box 31
Aitkin, MN 56431